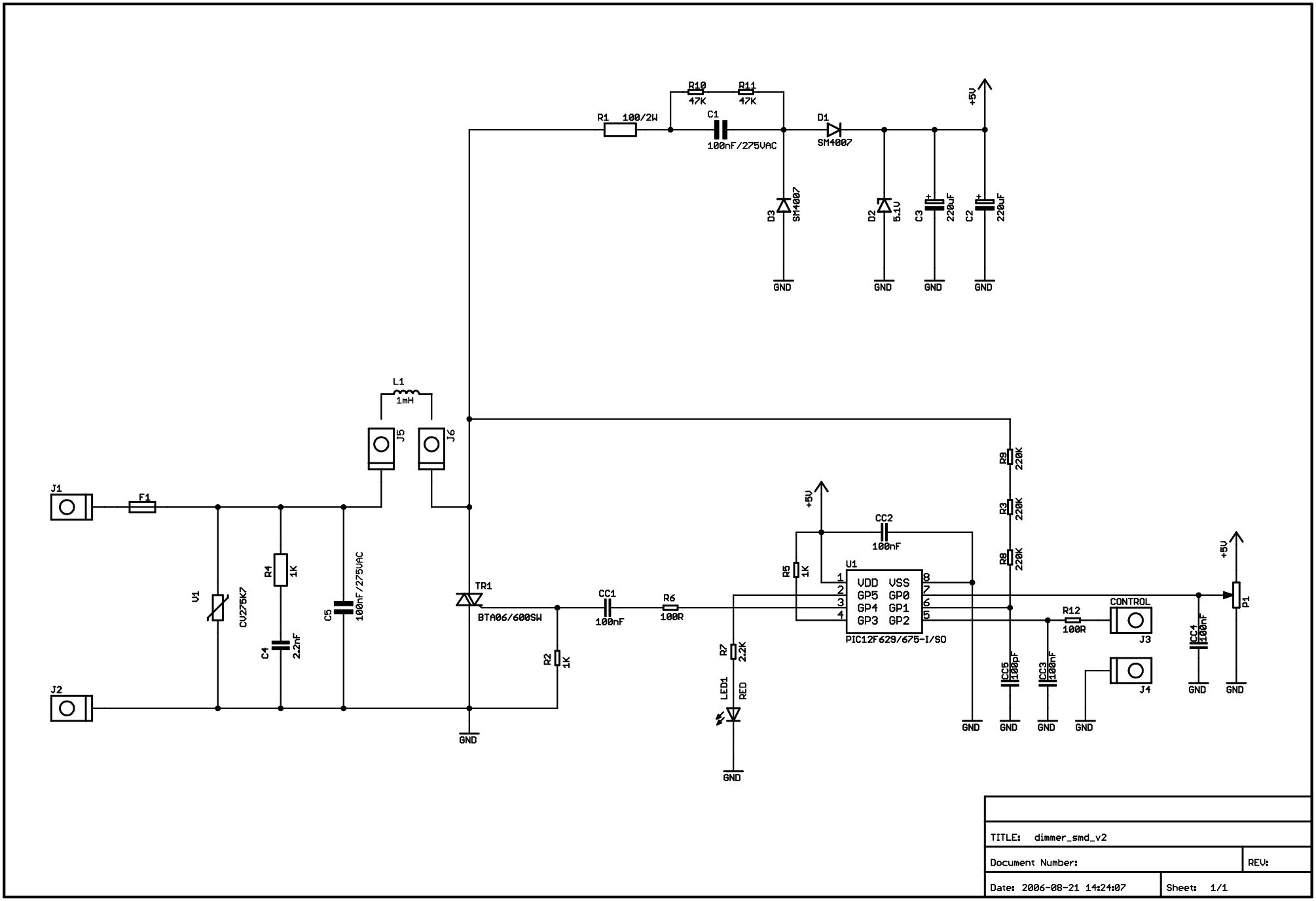

TITLE: dimmer_smd_v2	
Document Number:	REV:
Date: 2006-08-21 14:24:07	Sheet: 1/1