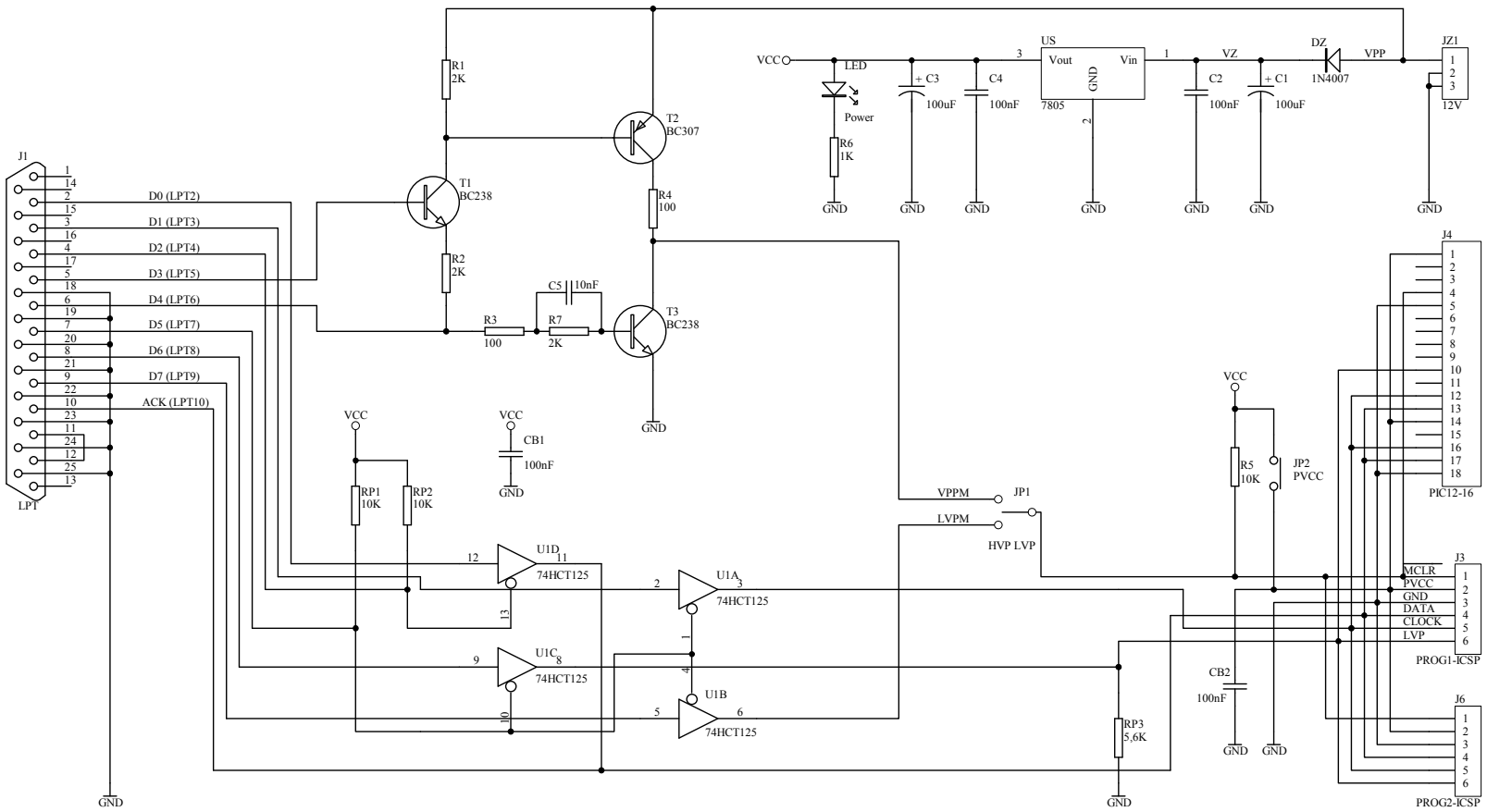
J1
LP1
D0 (LPT2)
D1 (LPT3)
D2 (LPT4)
D3 (LPT5)
D4 (LPT6)
D5 (LPT7)
D6 (LPT8)
D7 (LPT9)
ACK (LPT10)
GND
R1
2K
R2
2K
T1
BC238
T2
BC307
T3
BC238
R4
100
R3
100
R7
2K
C5
10nF
VCC
CB1
100nF
RP1
10K
RP2
10K
U1D
74HCT125
U1A
74HCT125
U1C
74HCT125
U1B
74HCT125
VPPM
LVPM
JP1
HVP LVP
LED
Power
R6
1K
C3
100uF
C4
100nF
US
7805
Vout
Vin
GND
C2
100nF
C1
100uF
VZ
DZ
1N4007
VPP
JZ1
12V
R5
10K
JP2
PVCC
CB2
100nF
RP3
5,6K
J4
PIC12-16
J3
MCLR
PVCC
GND
DATA
CLOCK
LVP
PROG1-ICSP
J6
PROG2-ICSP