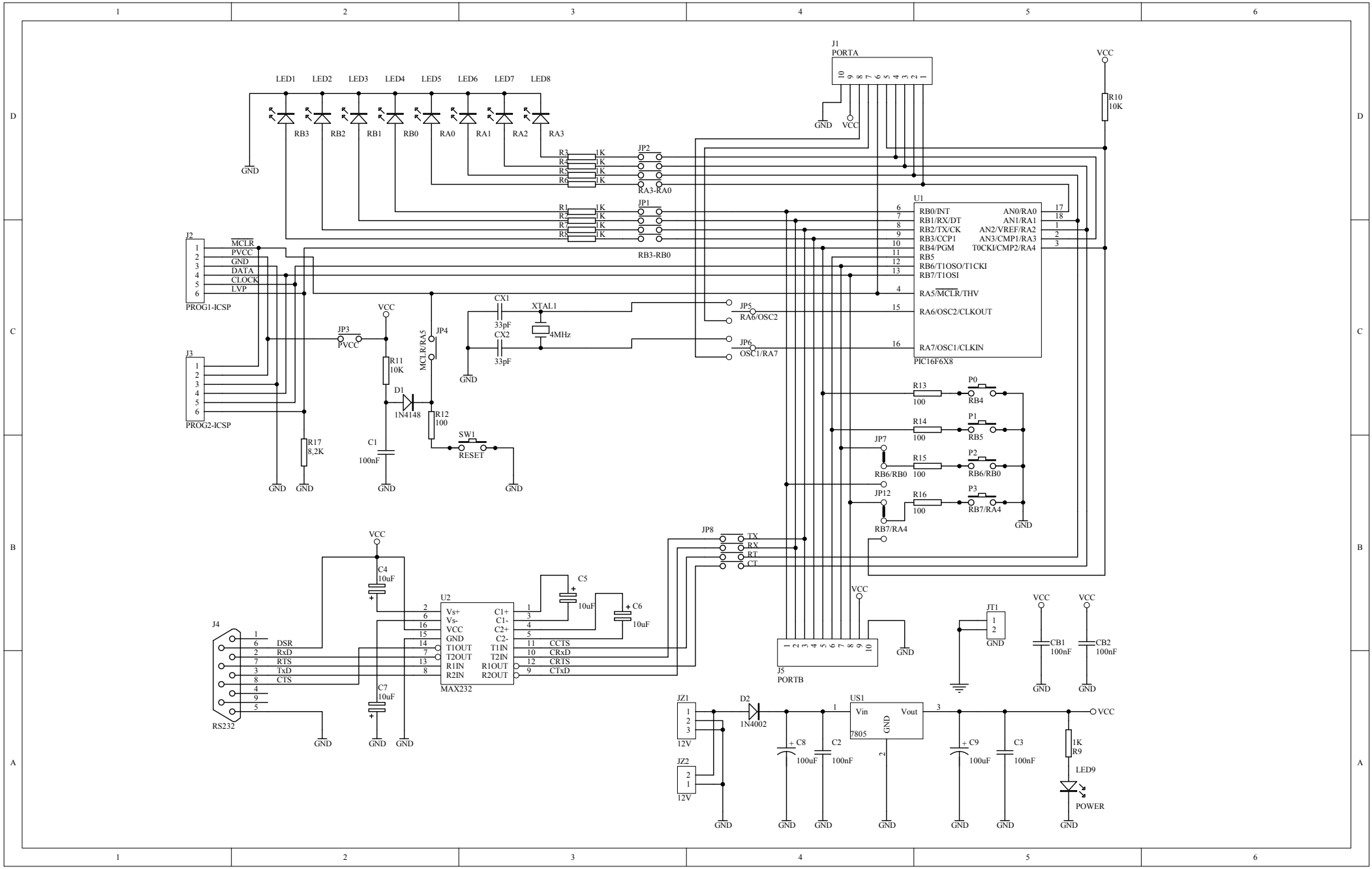
J1
PORTA
VCC
R10
10K
LED1
LED2
LED3
LED4
LED5
LED6
LED7
LED8
RB3
RB2
RB1
RB0
RA0
RA1
RA2
RA3
GND
R3
R4
R5
R6
1K
JP2
RA3-RA0
R1
R2
R7
R8
JP1
RB3-RB0
U1
RB0/INT
RB1/RX/DT
RB2/TX/CK
RB3/CCP1
RB4/PGM
RB5
RB6/T1OSO/T1CKI
RB7/T1OSI
RA5/MCLR/THV
RA6/OSC2/CLKOUT
RA7/OSC1/CLKIN
AN0/RA0
AN1/RA1
AN2/VREF/RA2
AN3/CMP1/RA3
T0CKI/CMP2/RA4
PIC16F6X8
J2
MCLR
PVCC
GND
DATA
CLOCK
LVP
PROG1-ICSP
J3
PROG2-ICSP
JP3
PVCC
JP4
MCLR/RA5
CX1
33pF
CX2
33pF
XTAL1
4MHz
JP5
RA6/OSC2
JP6
OSC1/RA7
R11
10K
D1
1N4148
R12
100
C1
100nF
R17
8,2K
SW1
RESET
R13
R14
R15
R16
100
P0
P1
P2
P3
RB4
RB5
RB6/RB0
RB7/RA4
JP7
JP12
JP8
TX
RX
RT
CT
C4
10uF
C5
10uF
C6
10uF
C7
10uF
U2
Vs+
Vs-
VCC
GND
T1OUT
T2OUT
R1IN
R2IN
C1+
C1-
C2+
C2-
T1IN
T2IN
R1OUT
R2OUT
MAX232
J4
DSR
RxD
RTS
TxD
CTS
RS232
J5
PORTB
JT1
CB1
100nF
CB2
100nF
JZ1
JZ2
12V
D2
1N4002
US1
Vin
Vout
7805
C8
100uF
C2
100nF
C9
100uF
C3
100nF
R9
1K
LED9
POWER